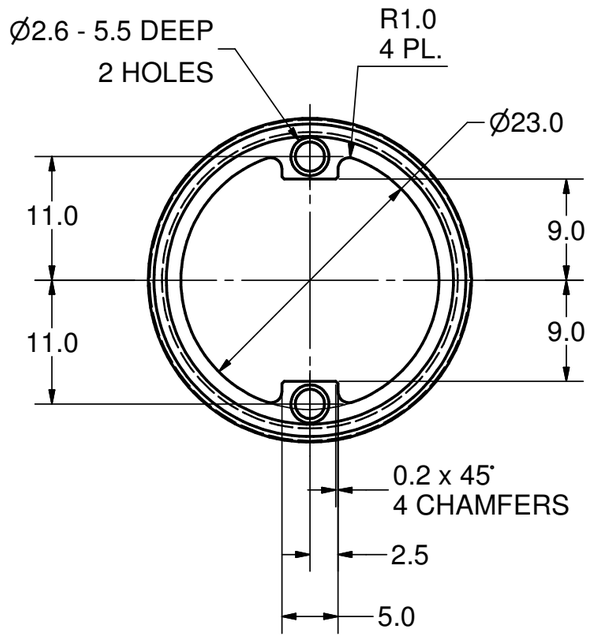

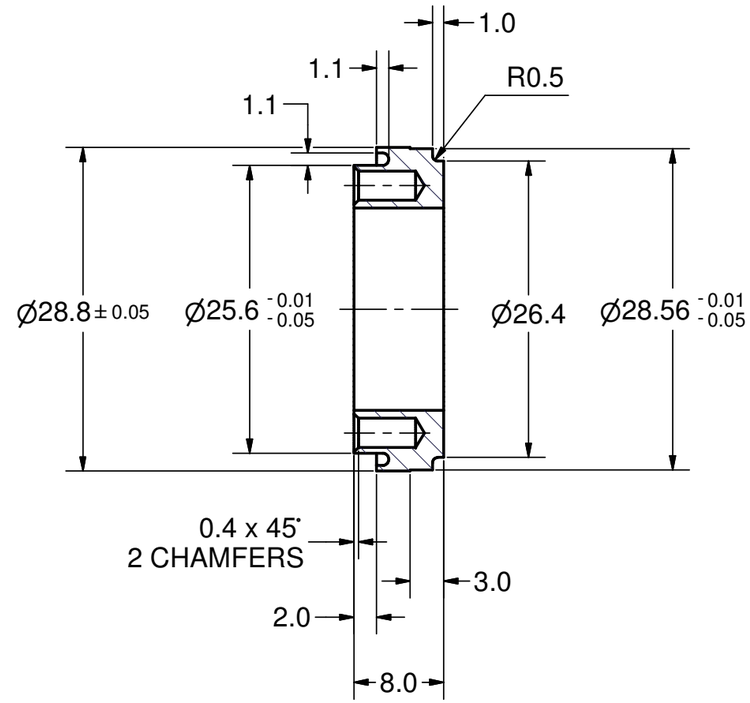

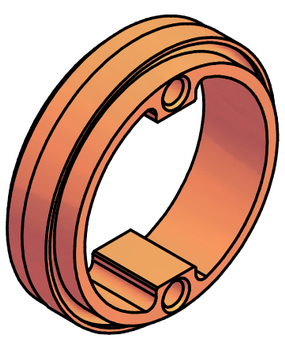

Issued all design changes as Rev C (TIO) - 4/19/07 - SAB

					Date	Name
				Drawn	10/5/04	Churanov
				Checked	08-06-05	VM
				Standard		
State	Changes	Date	Name			

Rev. C

Scale : 2:1 | mat: Copper, OFHC

ASSEMBLY : *75 kW CW Input Coupler*

DESIGNATION :

THERMOCOUPLE RING

100.131.003

1

A3